Revision:	Changes:	Date:
1.0	Initial Case, PCN: RVD002-107	2026.11.18

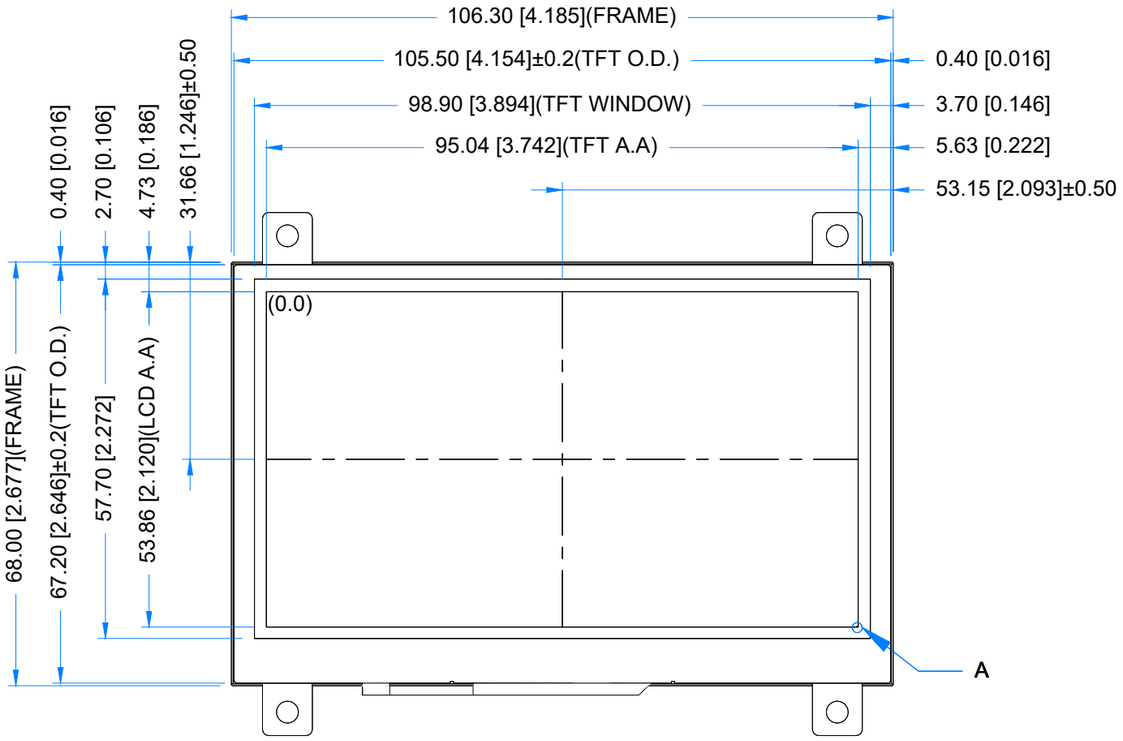

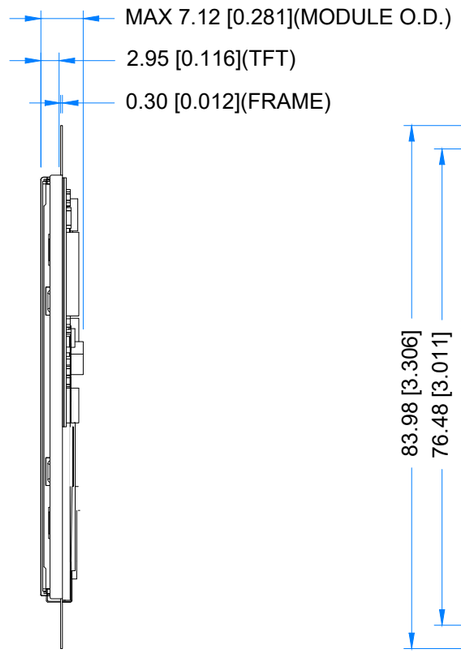

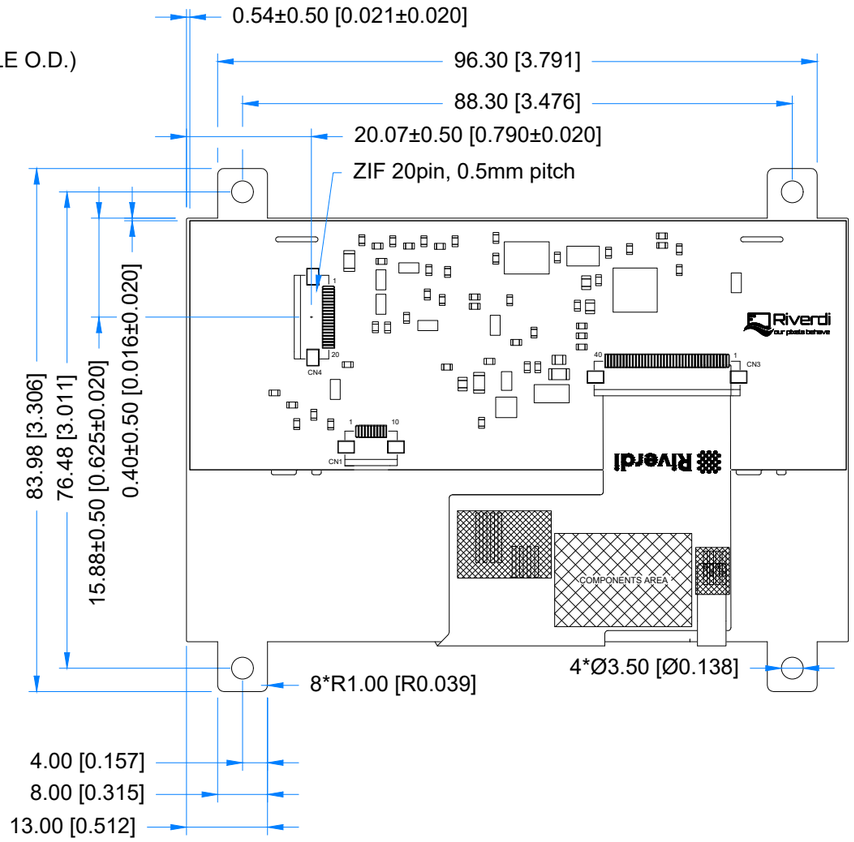

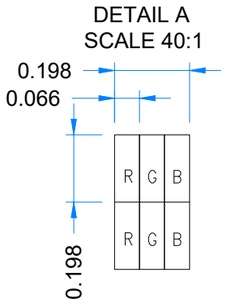

PINOUT ON THE 2ND PAGE

TFT NOTES:
1. DISPLAY TYPE: TRANSMISSIVE, NORMALLY WHITE
2. RESOLUTION: 480x272
3. VIEWING ANGLE: 12 O'CLOCK
4. INTERFACE: SPI/I2C
5. DRIVER IC ON THE BOARD: FT800
6. SUPPLY VOLTAGE FOR MODULE: 3.3V

GENERAL NOTES:
1. SURFACE LUMINANCE: 550cd/m^2
2. OPERATING TEMPERATURE: -20°C ~ 70°C
3. STORAGE TEMPERATURE: -30°C ~ 80°C
4. WITHOUT INDIVIDUAL TOLERANCE: ±0.3mm
5. RoHS COMPLIANT

PN: RVT4.3B480272CFWN00 V5				
SN:				
DRAWN:	M.Stabinski	2026.11.18	1:0.99	
CHECKED:	M.Wierzbowski	2026.11.18	[mm]	
APPR:	M.Wierzbowski	2026.11.18	ISO A3	P. 1 of 1

CONNECTOR 4			
Pin No.	Desc.	Pin No.	Desc.
1	VDD	11	NC
2	GND	12	NC
3	SPI_SCLK/I2C_SCL	13	NC
4	MISO/I2C_SDA	14	NC
5	MOSI/I2C_SA0	15	NC
6	CS/I2C_SA1	16	NC
7	INT	17	BLVDD
8	PD	18	BLVDD
9	MODE	19	BLGND
10	AUDIO_OUT	20	BLGND